N Series for USB
Multifunction DAQ Unit
(16ch AI, 2ch AO, 16ch DIO)

AIO-121602LN-USB

This product is a USB2.0-compliant analog I/O unit that extends the analog I/O function of USB port of PCs.
Compact design not restricting installation location (188.0(W) x 78.0(D) × 30.5(H)) makes it easy to install the product within the panel or device using DIN rail mounting jigs, or on the floor or wall.
Windows driver library is supplied. Possible to be used as a data recording device for LabVIEW, with dedicated libraries.

* Specifications, color and design of the products are subject to change without notice.

Features

Multi-function

Analog I/O can be implemented in a compact system. The series consists of two different models from which you can select the best model to suit your application.
This product contains the analog input (12bit, 16ch), analog output (12bit, 2ch).
This model includes bi-directional digital inputs / outputs (16points, TTL level) and a counter (32bit 1ch, TTL level). You can select the input/output by the application software in eight signals units.

Analog I/O can be synchronized with an internal timer or external clock.

Analog I/O can both be performed at fixed time intervals and synchronized with an external signal.

Digital filter function to prevent wrong recognition of external signal chattering is provided.

This product has analog input / output control signal, digital input signal and digital filter function to prevent it from chattering in counter input signal. (Counter gate signal)

Buffer memory available for background processing independent of software

The boards include buffer memory (1K Word each for analog input and output) which can be used in either FIFO or ring format. This allows analog I/O to be performed independently of the operating state of the PC or software.

Software-based calibration function

Calibration of analog input/output can be all performed by software. Apart from the adjustment information prepared before shipment, additional adjustment information can be stored according to the use environment.

Compact design not restricting installation location (188.0(W) x 78.0(D) x 30.5(H))

Compact design of 188.0(W) × 78.0(D) × 30.5(H) does not require special installation location.

Compatible to USB1.1/USB2.0

Compatible to USB1.1/USB2.0 and capable to achieve high speed transfer at HighSpeed (480 Mbps).

Diverse installations such as screw fastening, magnet, DIN rail are possible

Installation on the floor / wall /ceiling is possible by screw fastening, magnet, rubber feet, etc.
In addition, DIN rail mounting mechanism is equipped as standard with the product, making it easy to install the product within the panel or the device.

Easy-to-wire terminal connector adopted

Adoption of terminal connector (with screws) enables to achieve easy wiring.

Windows compatible driver libraries are attached.

Using the attached analog I/O driver API-USBP(WDM) makes it possible to create applications of Windows. In addition, a diagnostic program by which the operations of hardware can be checked is provided.

Supported to the data logger software [C-LOGGER] (Analog input only)

Supporting the data logger software [C-LOGGER] that enables the graph display of recorded signal data, file saving, and dynamic transfer to the spreadsheet software program “Excel”.

Plug-ins for the dedicated libraries, the board also supports MATLAB and LabVIEW.

We offer a dedicated library [ML-DAQ], which allows you to use this product on MATLAB by The MathWorks as well as another dedicated library [VI-DAQ], which allows you to use the product on LabVIEW.
These dedicated libraries are available, free of charge (downloadable), on our web site.

Support Software

Item	Specification
Analog input	
Isolated specification	Un-Isolated
Input type	Single-Ended Input or Differential Input
Number of input channels	16channels (Single-Ended Input), 8channels (Differential Input)
Input range	Bipolar ±10V, ±5V, ±2.5V or Unipolar 0 - +10V
Absolute max. input voltage	±15V
Input impedance	1MΩ or more
Resolution	12bit
Non-Linearity error *1	±20LSB
Conversion speed	2μsec/ch (Max.) *2 [500KSPS]*3
Buffer memory	1K data FIFO or 1K data RING
Conversion start trigger	Software / external trigger
Conversion stop trigger	Number of sampling times / external trigger/software
External start signal	TTL level (Rising or falling edge can be selected by software)
External stop signal	TTL level (Rising or falling edge can be selected by software)
External clock signal	TTL level (Rising or falling edge can be selected by software)
Analog output	
Isolated specification	Un-Isolated
Number of output channels	2ch
Output range	Bipolar ±10V, ±5V or Unipolar 0 - +10V, 0 - +5V
Output current ability	±3mA
Output impedance	1Ω or less
Resolution	12bit
Non-Linearity error *1	±20LSB
Conversion speed	12μsec (Max.) [83KSPS]*3
Buffer memory	1K data FIFO or 1K data RING
Conversion start trigger	Software / external trigger
Conversion stop trigger	Number of sampling times / external trigger/software
External start signal	TTL level (Rising or falling edge can be selected by software)
External stop signal	TTL level (Rising or falling edge can be selected by software)
External clock signal	TTL level (Rising or falling edge can be selected by software)
Digital I/O	
Number of I/O Channels	16-bit input lines, 8-bit input/output lines, 16-bit output lines (programmable)
I/O signal level	TTL level (positive logic)
Counter	
Number of channels	1channels
Counting system	Up count
Max. count	FFFFFFFFh (Binary data, 32bit)
Number of external inputs	TTL level : 2 (Gate/Up)ch, Gate (High level), Up (Rising edge)
Number of external outputs	TTL level : 1ch, Count match output (positive logic, pulse output)
Frequency response	5MHz (Max.)
USB	
Bus specification	USB Specification 2.0/1.1 standard
USB transfer rate	12Mbps (Full-speed), 480Mbps (High-speed) *4
Power supply	Bus power
Common section	
Connector	10 pin (screw-terminal) plug header x6
Number of terminals used at the same time	127 terminals (Max.) *5
Power consumption (Max.)	5VDC 450mA
Operating condition *6	0 - 50°C, 10 - 90%RH (No condensation)
Physical dimensions (mm)	180(L) x 140(D) x 34(H) (No protrusions)
Weight	300g
Attached cable length	USB Cable 1.8m

*1 : A linearity error approximately 0.1% of full-range may occur when operated at 0ºC or 50ºC ambient temperature.
*2: The required time is indicated in the analog to digital translation of one channel. When AD of two or more channels is converted, time of the a few minutes of the channel is necessary.
Conversion time = Number of conversion channelsx2μsec
*3: SPS = Samplings Per Second. The number of data that can be converted in one second is shown.
*4 : The USB transfer speed depends on the host PC environment used (OS and USB host controller).
*5 : As a USB hub is also counted as one device, you cannot just connect 127 USB terminals.
*6 : To suppress the heating, ensure that there are spaces for ventilation (about 5cm) around this product.

Support Software

Windows version of analog I/O driver API-AIO(WDM)
[Stored on the bundled CD-ROM driver library API-USBP(WDM)]

It is the library software, and which supplies command of hardware produced by our company in the form of standard Win32 API function (DLL). Using programming languages supporting Win32API functions, such as Visual Basic and Visual C++ etc., you can develop high-speed application software with feature of hardware produced by our company. In addition, you can verify the operation of hardware using Diagnostic programs.

< Operating environment >
OS Windows 7, Server 2008, Vista, XP, Server 2003 .etc
Adaptation language Visual Basic, Visual C++, Visual C# .etc
You can download the updated version from the CONTEC's Web site (http://www.contec.com/product/device/apiusbp/). For more details on the supported OS, applicable language and new information, please visit the CONTEC's Web site.

Data Logger Software C-LOGGER
[Stored on the bundled CD-ROM driver library API-USBP(WDM)]

C-LOGGER is a data logger software program compatible with our analog I/O products. This program enables the graph display of recorded signal data, zoom observation, file saving, and dynamic transfer to the spreadsheet software "Excel". No troublesome programming is required.
CONTEC provides download services (at http://www.contec.com/clogger) to supply the updated drivers. For details, refer to the C-LOGGER Users Guide or our website.

< Operating environment >
OS Windows 7, Vista, XP, Server 2003,

Data acquisition VI library for LabVIEW VI-DAQ (Available for downloading (free of charge) from the CONTEC web site.)

This is a VI library to use in National Instruments LabVIEW. VI-DAQ is created with a function form similar to that of LabVIEW's Data Acquisition VI, allowing you to use various devices without complicated settings.
See http://www.contec.com/vidaq/ for details and download of VI-DAQ.

Packing List

Unit (AIO-121602LN-USB) …1
USB cable (1.8m) …1
USB cable attachment on the main unit's side
(For Mini B connector side) …1
First step guide …1
I/O connector …6
Rubber feet …4
Magnet …2
CD-ROM *1 [API-USBP(WDM)] …1

*1 The CD-ROM contains the driver software and User's Guide (this guide)

Block Diagram

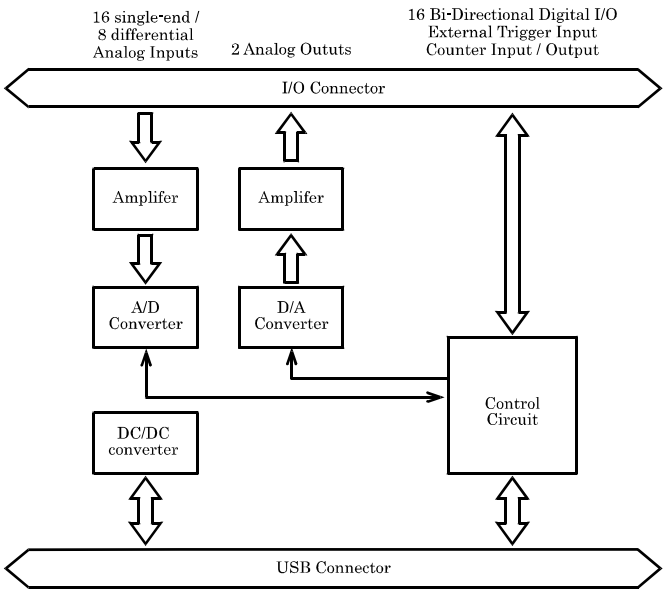

Physical Dimensions

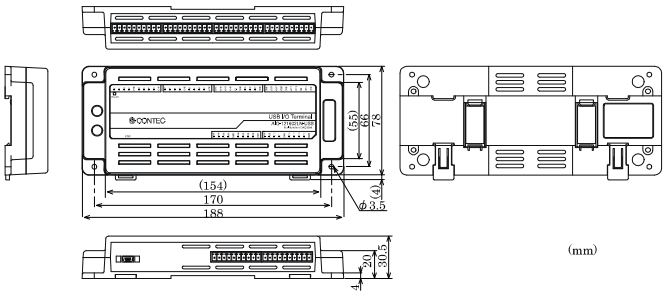

Installation Method

Mounting on a DIN Rail

Mounting procedure

(1) Push the fixing hook up using a slotted screwdriver to make it unlockable.

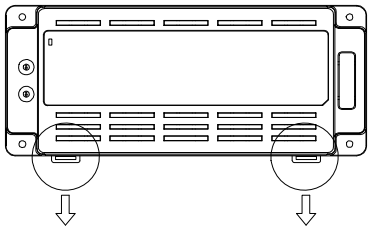

(2) Hook the product from the upper part of the DIN rail, and press the lower part on to the DIN rail.

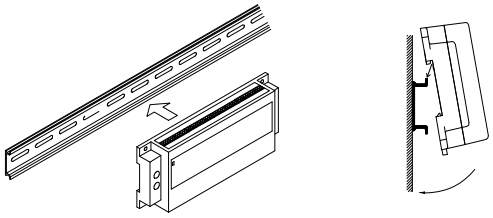

(3) Push the fixing hook up using a slotted screwdriver to make it lockable.

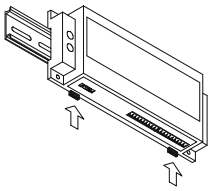

Removal procedure

(1) Pull down the fixing hook of the unit to unlock it.

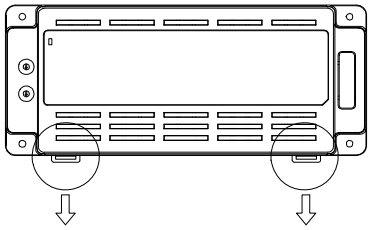

(2) With the fixing hook unlocked, pull the lower part of this unit toward you.

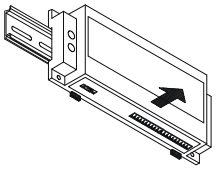

(3) By lifting this unit, you can easily remove it from the DIN rail.

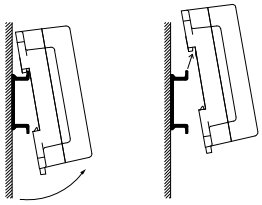

Desktop Installation

Using the rubber feet

When required to mount the product on the desktop, mount it on a horizontal platform.
The rubber feet can be mounted in their mounting holes as shown in the following figure.

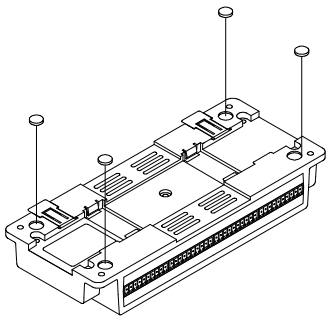

Wall Installation

To mount the product on the wall, purchase the commercially available screw (fitting for ϕ3.5) separately.

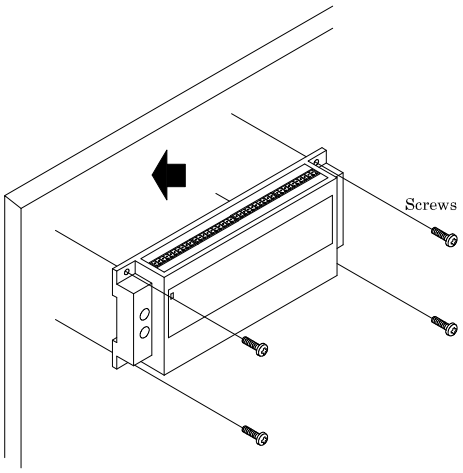

Installation Using the Magnet

Attaching the magnet supplied with the product makes it easy to mount or remove the product on or from a metal surface such as steel desk or partition.

⚠ CAUTION

- Do not let the magnet go near objects that can be affected by magnetic fields, such as monitors and floppy disks.
- If the product is shifted while mounted on the steel surface, the surface paint may be scratched.
- When using the magnet, stack connection is not possible.

Mounting/ removing the magnet

To mount the magnet, press down the entire length of the magnet into its mounting hole while pushing the magnet in the direction of arrow 1. Next, slide the magnet in the direction of arrow 2 to fix it in position.

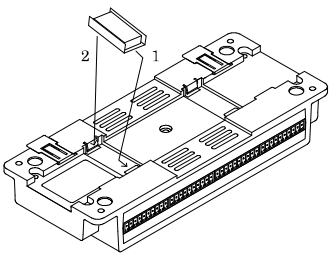

To remove the magnet, slide the magnet in the direction of arrow 1 as shown in the following figure, and then lift it out in the direction of arrow 2.

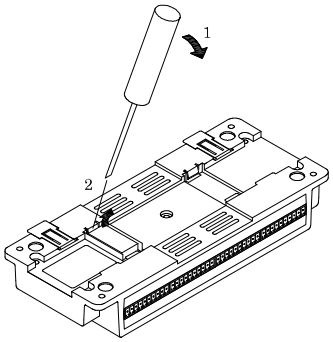

Mounting onto the steel wall

Mount the product directly onto the steel wall. Pull it gently after mounting to confirm that it will not drop off from the body.

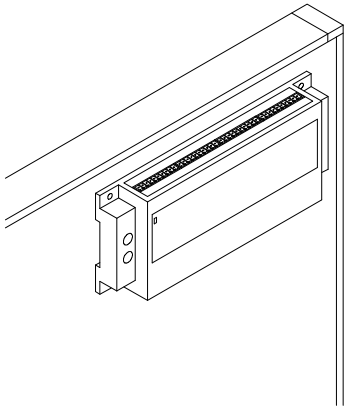

Installation Conditions

Installation orientation

It is possible to mount it in the orientations shown in the following figure. Other orientations would cause problems in usage, such as inadequate heat dissipation.

DIN rail fixation

Vertical installation

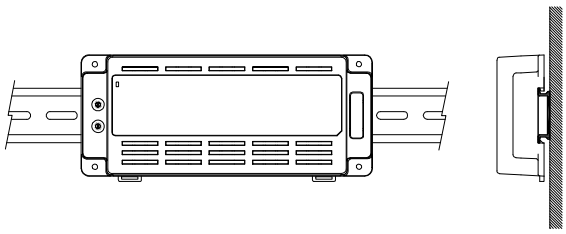

Horizontal installation

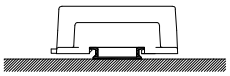

Installation on a ceiling

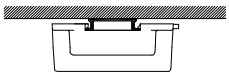

Screws / magnet fixation

Vertical installation

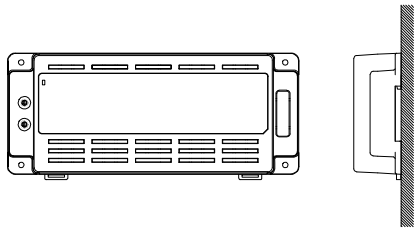

Horizontal installation

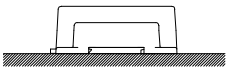

Installation on a ceiling

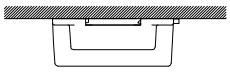

⚠ CAUTION

When using the product in a high temperature environment, cool it by blowing air even when the temperature is within the specified range.

Spacing between the system unit and any surrounding objects

Secure a distance of at least 50mm between the top of the main unit (single use) and any surrounding objects.
Do not locate the unit in a fully enclosed housing.

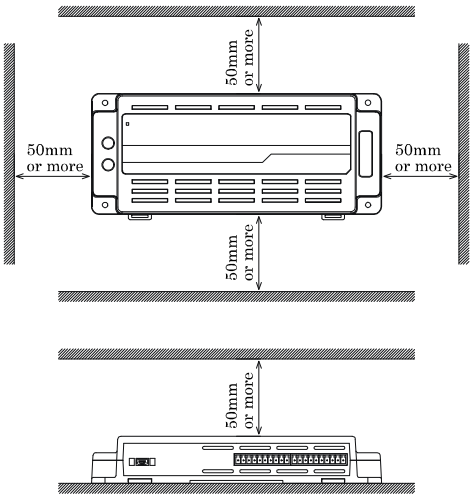

Connection Method

Connecting an Interface Connector

When connecting the unit to an external device, you can use the supplied connector plug. For wiring, strip off approximately 7 mm of the covered part of a wire rod and then insert it to the opening. After the insertion, secure the wire rod with screws. Compatible wires are AWG 28 - 16.

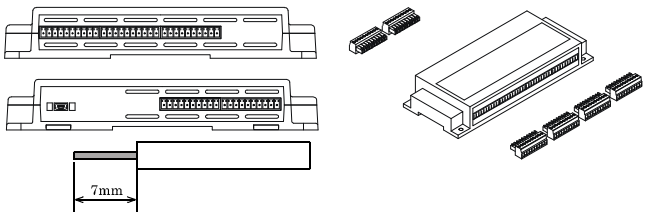

- Connector used :
  3.5mm pitch, 10 pin type of rated current 9.0A
  STL1550/10G-3.5-H-GREEN [mfd. by PTR]
- Compatible plug (supplied) :
  AK1550/10-3.5-GREEN [mfd. by PTR]
  Compatible wires : AWG28-16

⚠ CAUTION

Removing the connector plug by grasping the cable can break the wire.

Signal Layout

The unit can be connected to an external device using 10-pin connectors that is provided on the unit face.

Single-Ended Input

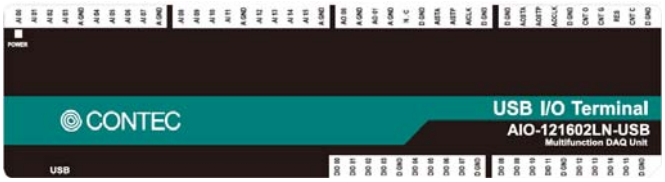

Signal name	Meaning
AI00	Analog Input 00
AI01	Analog Input 01
AI02	Analog Input 02
AI03	Analog Input 03
AGND	Analog Ground (for AI)
AI04	Analog Input 04
AI05	Analog Input 05
AI06	Analog Input 06
AI07	Analog Input 07
AGND	Analog Ground (for AI)
AI08	Analog Input 08
AI09	Analog Input 09
AI10	Analog Input 10
AI11	Analog Input 11
AGND	Analog Ground (for AI)
AI12	Analog Input 12
AI13	Analog Input 13
AI14	Analog Input 14
AI15	Analog Input 15
AGND	Analog Ground (for AI)

Signal name	Meaning
AO00	Analog Output 00
AGND	Analog Ground (for AO)
AO01	Analog Output 01
AGND	Analog Ground (for AO)
N.C.	N.C.
DGND	Digital Ground
AISTA	AI External Start Trigger Input
AISTP	AI External Stop Trigger Input
AICLK	AI External Sampling Clock Input
DGND	DigitalGround
DGND	DigitalGround
AOSTA	AO External Start Trigger Input
AOSTP	AO External Stop Trigger Input
AOCLK	AO External Sampling Clock Input
DGND	DigitalGround
CNT O	Counter Output
CNT G	Counter Gate Control Input
RES	Reserved
CNT C	Counter Up Clock Input
DGND	DigitalGround

Signal name	Meaning
DIO00	Digital Input/Output 00
DIO01	Digital Input/Output 01
DIO02	Digital Input/Output 02
DIO03	Digital Input/Output 03
DGND	Digital Ground
DIO04	Digital Input/Output 04
DIO05	Digital Input/Output 05
DIO06	Digital Input/Output 06
DIO07	Digital Input/Output 07
DGND	DigitalGround
DIO08	Digital Input/Output 08
DIO09	Digital Input/Output 09
DIO10	Digital Input/Output 10
DIO11	Digital Input/Output 11
DGND	DigitalGround
DIO12	Digital Input/Output 12
DIO13	Digital Input/Output 13
DIO14	Digital Input/Output 14
DIO15	Digital Input/Output 15
DGND	DigitalGround

Analog Input 00 - Analog Input 15	Analog input signal. The numbers correspond to channel numbers.
Analog Ground (fir AI)	Common analog ground for analog input signals.
Analog Output 00 - Analog Output 01	Analog output signal. The numbers correspond to channel numbers.
Analog Ground (dor AO)	Common analog ground for analog output signals.
AI External Start Trigger Input	External trigger input for starting analog input sampling.
AI External Stop Trigger Input	External trigger input for stopping analog input sampling.
AI External Sampling Clock Input	External sampling clock input for analog input.
AO External Start Trigger Input	External trigger input for starting analog output sampling.
AO External Stop Trigger Input	External trigger input for stopping analog output sampling.
AO External Sampling Clock Input	External sampling clock input for analog output.
Digital Input / Output 00 - Digital Input / Output 15	Digital Input / Output signal.
Counter Gate Control Input	Gate control input signal for counter.
Counter Up Clock Input	Count-up clock input signal for counter.
Counter Output	Count match output signal for counter.
Digital Ground	Common digital ground for digital I/O signals, external trigger inputs, external sampling clock inputs, and counter I/O signals.
Reserved	Reserved pin.
N.C.	No connection to this pin.

Differential Input

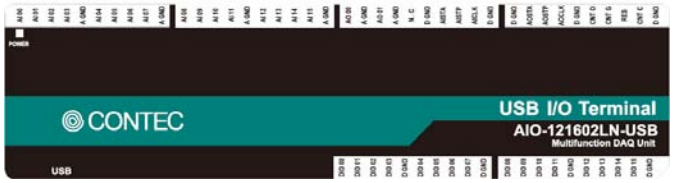

Signal name	Meaning	Signal name	Meaning	Signal name	Meaning
AI00	Analog Input 00[+]	AO00	Analog Output 00	DIO00	Digital Input/Output 00
AI01	Analog Input 00[-]	AGND	Analog Ground (for AO)	DIO01	Digital Input/Output 01
AI02	Analog Input 01[+]	AO01	Analog Output 01	DIO02	Digital Input/Output 02
AI03	Analog Input 01[-]	AGND	Analog Ground (for AO)	DIO03	Digital Input/Output 03
AGND	Analog Ground (for AI)	N.C.	N.C.	DGND	Digital Ground
AI04	Analog Input 02[+]	DGND	Digital Ground	DIO04	Digital Input/Output 04
AI05	Analog Input 02[-]	AISTA	AI External Start Trigger Input	DIO05	Digital Input/Output 05
AI06	Analog Input 03[+]	AISTP	AI External Stop Trigger Input	DIO06	Digital Input/Output 06
AI07	Analog Input 03[-]	AICLK	AI External Sampling Clock Input	DIO07	Digital Input/Output 07
AGND	Analog Ground (for AI)	DGND	DigitalGround	DGND	DigitalGround
AI08	Analog Input 04[+]	DGND	DigitalGround	DIO08	Digital Input/Output 08
AI09	Analog Input 04[-]	AOSTA	AO External Start Trigger Input	DIO09	Digital Input/Output 09
AI10	Analog Input 05[+]	AOSTP	AO External Stop Trigger Input	DIO10	Digital Input/Output 10
AI11	Analog Input 05[-]	AOCLK	AO External Sampling Clock Input	DIO11	Digital Input/Output 11
AGND	Analog Ground (for AI)	DGND	DigitalGround	DGND	DigitalGround
AI12	Analog Input 06[+]	CNT O	Counter Output	DIO12	Digital Input/Output 12
AI13	Analog Input 06[-]	CNT G	Counter Gate Control Input	DIO13	Digital Input/Output 13
AI14	Analog Input 07[+]	RES	Reserved	DIO14	Digital Input/Output 14
AI15	Analog Input 07[-]	CNT C	Counter Up Clock Input	DIO15	Digital Input/Output 15
AGND	Analog Ground (for AI)	DGND	DigitalGround	DGND	DigitalGround

Analog Input 00 – Analog Input 07	Analog input signal. The numbers correspond to channel numbers.
Analog Ground (for AI)	Common analog ground for analog input signals.
Analog Output 00 – Analog Output 01	Analog output signal. The numbers correspond to channel numbers.
Analog Ground (for AO)	Common analog ground for analog output signals.
AI External Start Trigger Input	External trigger input for starting analog input sampling.
AI External Stop Trigger Input	External trigger input for stopping analog input sampling.
AI External Sampling Clock Input	External sampling clock input for analog input.
AO External Start Trigger Input	External trigger input for starting analog output sampling.
AO External Stop Trigger Input	External trigger input for stopping analog output sampling.
AO External Sampling Clock Input	External sampling clock input for analog output.
Digital Input /Output 00 – Digital Input /Output 15	Digital input / Output signal.
Counter Gate Control Input	Gate control input signal for counter.
Counter Up Clock Input	Count-up clock input signal for counter.
Counter Output	Count match output signal for counter.
Digital Ground	Common digital ground for digital I/O signals, external trigger inputs, external sampling clock inputs, and counter I/O signals.
Reserved	Reserved pin.
N.C.	No connection to this pin.

Analog Input Signal Connection

The procedure for connecting analog signals depends on whether the analog input signals are single-ended or differential. The sections below describe how to connect the signals using flat cable and shielded cable.

Single-ended Input

The following figure shows an example of flat cable connection. Connect separate signal and ground wires for each analog input channel on interface connector.

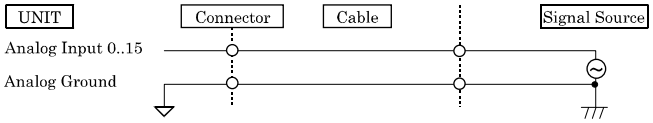

The following figure shows an example of shield cable connection. Use shielded cable if the distance between the signal source and unit is long or if you want to provide better protection from noise. For each analog input channel on interface connector, connect the core wire to the signal line and connect the shielding to ground.

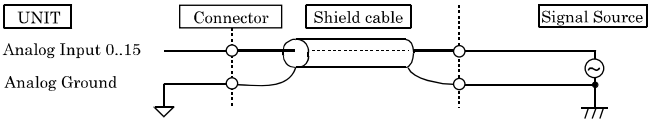

⚠ CAUTION

- If the signal source contains over 500 kHz signals, the signal may affect the cross-talk noise between channels.
- If the unit and the signal source receive noise or the distance between the unit and the signal source is too long, data may not be input properly.
- An input analog signal should not exceed the maximum input voltage (relate to the product analog ground). If it exceeds the maximum voltage, the unit may be damaged.
- Connect all the unused analog input channels to analog ground.
- In the channel switching, the multiplexer does the electrical charge and discharge on the internal capacitor according to the signal voltage. Therefore, the voltage from the previous switching state may go into the next channel. It might cause the error of the signal source action. If this occurs, insert a high-speed amplifier as a buffer between the signal source and the analog input pin to reduce the fluctuation.
- An input pin may fail to obtain input data normally when the signal source connected to the pin has high impedance. If this is the case, change the signal source to one with lower output impedance or insert a high-speed amplifier buffer between the signal source and the analog input pin to reduce the effect.

Differential Input

The following figure shows an example of flat cable connection. For each analog input channel on interface connector, connect the "+" input to the signal and connect the "-" input to the signal source ground. Also connect the analog ground on the unit to the signal source ground.

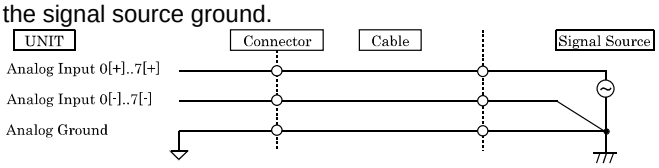

The following figure shows an example of shielded cable connection. Use shielded cable if the distance between the signal source and unit is long or if you want to provide better protection from noise. For each analog input channel on interface connector, connect the "+" input to the signal and connect the "-" input to the signal source ground. Also connect the analog ground on the unit and the signal source ground to the shielding.

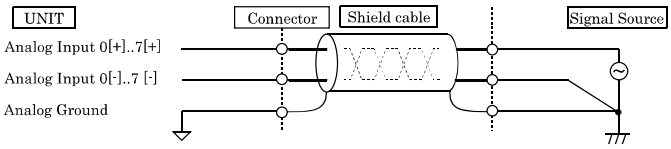

⚠ CAUTION

- If the signal source contains over 500 kHz signals, the signal may affect the cross-talk noise between channels.
- When the analog ground is not connected, the conversion data is not determined.
- If the unit and the signal source receive noise or the distance between the unit and the signal source is too long, data may not be input properly.
- An input analog signal should not exceed the maximum input voltage (relate to the unit analog ground). If it exceeds the maximum voltage, the unit may be damaged.
- Connect all the unused analog input channels to analog ground.
- In the channel switching, the multiplexer does the electrical charge and discharge on the internal capacitor according to the signal voltage. Therefore, the voltage from the previous switching state may go into the next channel. It might cause the error of the signal source action. If this occurs, insert a high-speed amplifier as a buffer between the signal source and the analog input pin to reduce the fluctuation.
- An input pin may fail to obtain input data normally when the signal source connected to the pin has high impedance. If this is the case, change the signal source to one with lower output impedance or insert a high-speed amplifier buffer between the signal source and the analog input pin to reduce the effect.

Analog Output Signal Connection

This section shows how to connect the analog output signal by using a flat cable or a shield cable.
The following figure shows an example of flat cable connection. Connect the signal source and ground to the interface connector analog output.

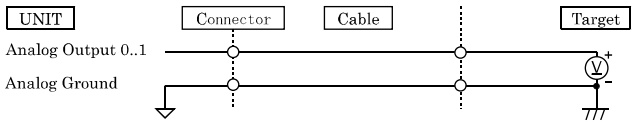

The following figure shows an example of shield cable connection. Use shield cable if the distance between the signal source and this product is long or if you want to provide better protection from noise. For the interface connector analog output, connect the core wire to the signal line and connect the shielding to ground.

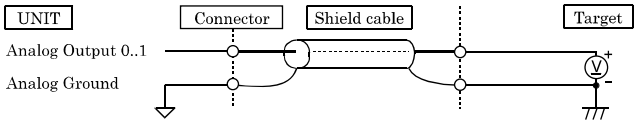

⚠ CAUTION

- If this product or the connected wire receives noise, or the distance between this product and the target is long, data may not be outputted properly.
- For analog output signal, the current capacity is ±3mA (Max.). Check the specification of the connected device before connecting this product.
- Do not short the analog output signal to analog ground, digital ground, and/or power line. Doing so may damage this product.
- Do not connect an analog output signal to any other analog output, either on this product or on an external device, as this may cause a fault on this product.
- Analog output signal outputs hundreds of micro voltages when USB cable is inserted.

Connecting I/O Signals

The following sections show examples of how to connect digital I/O signals.
All the I/O signals are TTL level, and input or output can be set in 8 bit unit by software.

I/O Circuit

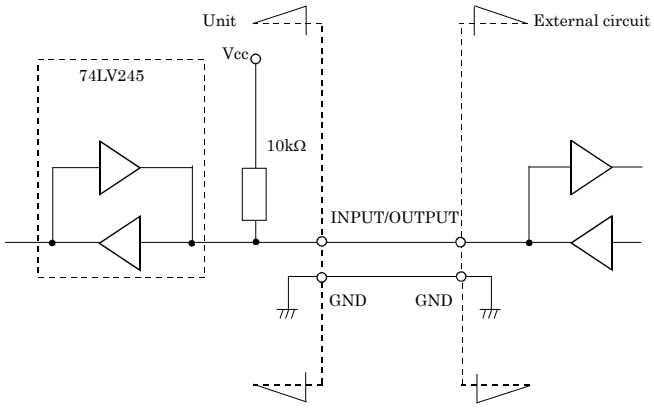

Example of Connection

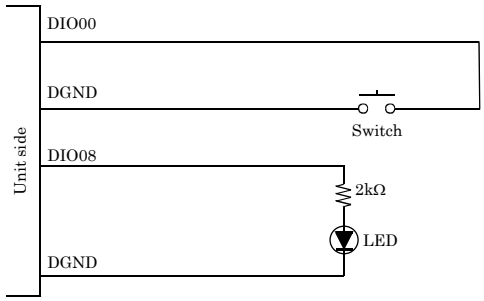

When switch is "ON", the corresponding bit is "0". When switch is "OFF" in contrast, the corresponding bit is "1".
When "1" is output to a relevant bit, the corresponding LED comes on. When "0" is output to the bit, in contrast, the LED goes out.

⚠ CAUTION

Take care not to short the outputs to digital ground as this may cause a fault.

Counter signals and Control signals Connection

Counter signals and Control signals Connection
The following sections show examples of how to connect counter I/O signals, and other control I/O signals (external trigger input signals, sampling clock input signals, etc.).
All the counter I/O signals and control signals are TTL level signals.

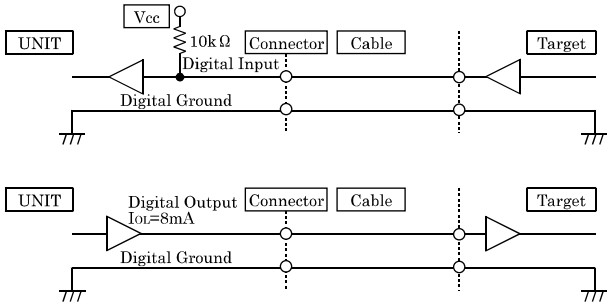

About the counter input control signal

Counter Gate Control Input (refer to the user's manual - chapter 3 Connector Pin Assignment) acts as an input that validate or invalidate the input of an external clock for the counter. This function enables the control of an external clock input for the counter. The external clock for the counter is effective when input is "High" and invalid when input is "Low". If unconnected, it is a pull-up in this product and remains "High". Therefore the external clock for the counter is effective when the counter gate control input is not connected.

⚠ CAUTION

- Do not short the output signals to analog ground, digital ground, and/or power line. Doing so may damage the product.
- If connected to each output, a pull-up resistor must be about 10kΩ to pull up with a 5V power source.
- Each input accepts 5V TTL signals.

Reference

For the operation timings for control signal input, see the user's manual - "Control Signal Timings" in Chapter 6 "Hardware".