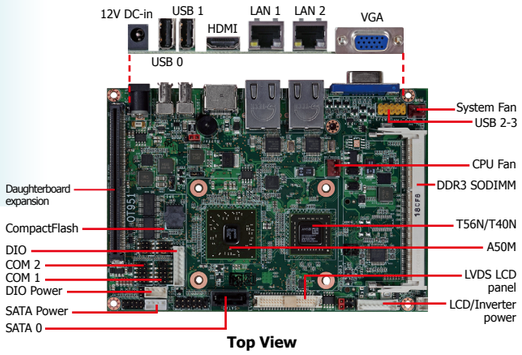

Top View

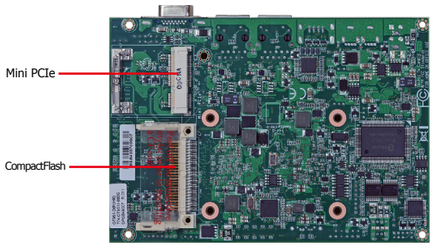

Bottom View

Features

CHIPSET	**AMD® A50M**
APU	**AMD® T56N/T40N**
MEMORY	**1 DDR3 SODIMM up to 8GB**
EXPANSION	**1 Mini PCIe, 1 Connector for daughterboard expansion**
GRAPHICS	**VGA, LVDS, HDMI**
LAN	**2 Gigabit LAN**
DIMENSIONS	**146mm x 102mm (5.75" x 4.02")**

Mechanical Drawing

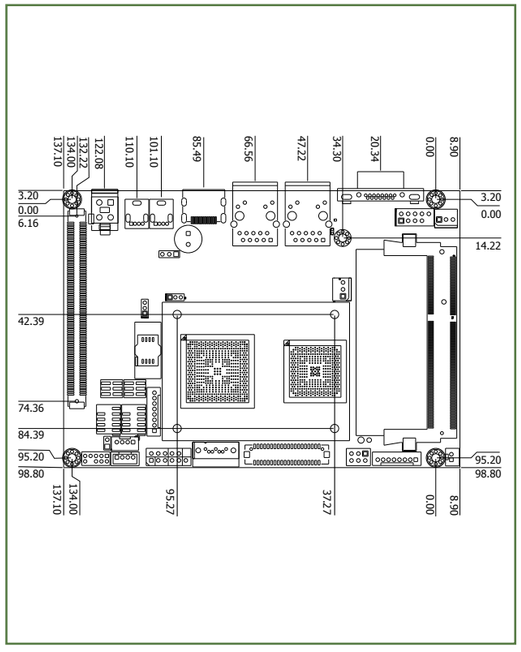

Block Diagram

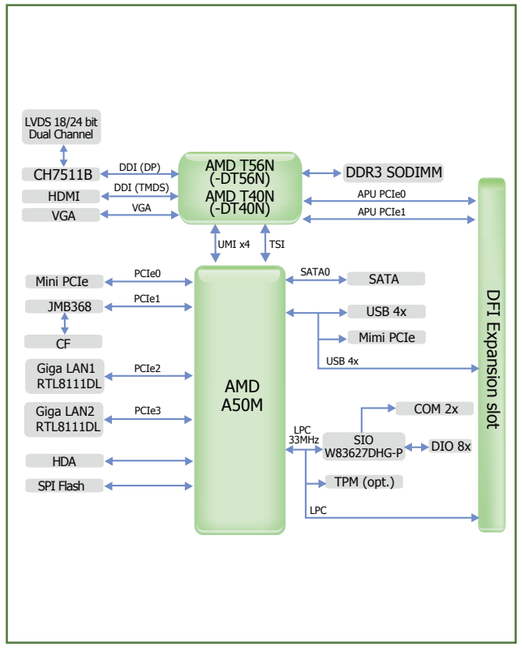

OT951-DT56N/DT40N 3.5” DFI

Specifications

APU (Accelerated Processing Unit)
- OT951-DT56N:
  - AMD® T56N, 1.65GHz, 2x 512KB L2, 18W TDP, dual-core
  - Cooling option: heatsink with cooling fan
- OT951-DT40N:
  - AMD® T40N, 1.0GHz, 2x 512KB L2, 9W TDP, dual-core
  - Cooling option: heatsink (fanless solution)

CHIPSET
- AMD® A50M Controller Hub

SYSTEM MEMORY
- One 204-pin DDR3 SODIMM sockets
- Supports DDR3 1066/1333MHz (OT951-DT56N) Supports DDR3 1066MHz (OT951-DT40N)
- Supports single channel memory interface
- Supports up to 8GB system memory
- DRAM device technologies: 1Gb, 2Gb and 4Gb DDR3 DRAM technologies are supported for x8 and x16 devices, unbuffered, non-ECC

EXPANSION SLOTS
- 1 mini PCIe x1 slot
- 1 CompactFlash socket
- 1 connector for daughterboard expansion
  - 2 PCIe x1
  - 4 USB 2.0
  - 1 LPC

ONBOARD GRAPHICS FEATURES
- Advanced discrete-level GPU integrated in the processor
  - AMD Radeon™ HD 6320 (OT951-DT56N)
  - AMD Radeon™ HD 6290 (OT951-DT40N)
- Supports HDMI, LVDS and VGA interfaces
- Supports DirectX 11, OpenGL 3.2 and OpenCL 1.1
- Supports AMD Turbo Core 2.0 technology
- LVDS: Chrontel CH7511B, 24-bit dual channel
- HDMI display resolution up to 1920x1080
- VGA display resolution
  - Up to 2048x1536 (OT951-DT56N)
  - Up to 1920x1200 (OT951-DT40N)
- Supports Hardware H.264, MPEG4 Part 2, VC-1, and MPEG2 decode

ONBOARD AUDIO FEATURES
- Realtek ALC886 7.1-channel High Definition Audio

ONBOARD LAN FEATURES
- 2 Realtek RTL8111DL Gigabit Ethernet Controllers
- Integrated 10/100/1000 transceiver
- Fully compliant with IEEE 802.3, IEEE 802.3u, IEEE 802.3ab
- Supports wire management

SERIAL ATA (SATA) INTERFACE
- Supports 1 Serial ATA interface
- SATA 2.0 with data transfer rate up to 3Gb/s
- Integrated Advanced Host Controller Interface (AHCI) controller

IDE INTERFACE
- JMicron JMB368 PCI Express to PATA host controller
- Supports 1 CompactFlash interface

TRUSTED PLATFORM MODULE (TPM) - optional
- Provides a Trusted PC for secure transactions
- Provides software license protection, enforcement and password protection

REAR PANEL I/O PORTS
- 1 HDMI port
- 1 DB-15 VGA port
- 2 RJ45 LAN ports
- 2 USB 2.0/1.1 ports
- 12V DC-in jack

I/O CONNECTORS
- 1 connector for 2 external USB 2.0/1.1 ports
- 2 connectors for 2 external RS232/422/485 serial ports
- 1 LVDS LCD panel connector
- 1 LCD/inverter power connector
- 1 8-bit Digital I/O connector
- 1 front audio connector for line-out and mic-in jacks
- 1 Serial ATA port
- 1 chassis intrusion connector
- 1 front panel connector
- 2 fan connectors

BIOS
- AMI BIOS
- 64Mbit SPI BIOS

ENERGY EFFICIENT DESIGN
- Supports ACPI
- System Power Management
- Wake-On-Events include:
  - Wake-On-PS/2 KB/Mouse
  - Wake-On-USB KB/Mouse
  - Wake-On-LAN
  - RTC timer to power-on the system
- CPU stopped clock control
- AC power failure recovery

DAMAGE FREE INTELLIGENCE
- Monitors CPU/system temperature and overheat alarm
- Monitors Vcore/Vnb/V_DIMM/5V/12V voltages and failure alarm
- Monitors CPU/system fan speed and failure alarm
- Read back capability that displays temperature, voltage and fan speed
- Watchdog timer function

TEMPERATURE
- Operating: 0°C to 60°C
- Storage: -20°C to 85°C

HUMIDITY
- 10% to 90%

DIMENSIONS
- 3.5" board
- 146mm (5.75") x 102mm (4.02")

Packing List

- 1 OT951-D board
- 2 Serial ATA data cables
- 1 USB port cable (with bracket)
- 2 COM port cables (with bracket)
- 1 DVD
- 1 QR (Quick Reference)

Optional Items

- Serial ATA data cable
- USB port cable
- COM port cable

DFI reserves the right to change the specifications at any time prior to the product's release. Changes thereafter will be based on the product's revision. Please contact your sales representative for the exact revision offered in your area. All product names mentioned are trademarks of their respective companies. © February 10, 2012 DFI Inc.